Environment and Planning, 1970, volume 2, pages 211-224

Urban velocity fields

S.Angel, G.M.Hyman
Centre for Environmental Studies, 5 Cambridge Terrace, Regent's Park, London NW1, England
Received 15 January 1970

Abstract. The city is not an undifferentiated terrain and travel does not occur along straight-line paths at constant velocities. Variations in travel velocities at different locations bend the minimum time paths away from regions of high congestion. This paper discusses a transformation of the urban plane into a time surface on which distance corresponds to travel time, and describes the construction of minimum paths and isochrones for various velocity fields.

This view of the urban transportation system allows us to discover some of the important features which are often hidden in a network description of the system.

"*One man's crooked lines are another man's geodesics*" (William Warntz).

1 Urban space as a velocity field

The city is not an undifferentiated terrain and travel in the city does not occur along straight-line paths at constant velocities. Urban travel takes place in a dense network of roads and transit lines at varying speeds. Detours, wide deviations from straight-line paths, become the rule rather than the exception.

Recent urban models have rejected the earlier simplification of the city into a euclidean plane and have preferred a network of transportation links as the basic conceptual framework for the analysis of travel behaviour. The main disadvantage of these models is their complexity, which is partly a result of the sheer amount of information involved in characterising movement in the network. The important characteristics of the transportation system are thus hidden, and are difficult to grasp. The geometric properties of the city and its transport network are lost.

In order to regain an overview of travel in the city, in a context of an ever-changing transport network, we wish to retain the elegance of the earlier view of the city as a continuous terrain. We must, however, incorporate the higher quality of travel information used in modern transportation studies. If we retain the view of travel taking place on the plane, we must introduce some differentiation in the ease of travel on the plane. Such differentiation can easily be introduced as variations in travel velocities between locations on the plane.

In today's urban areas, transportation networks are sufficiently dense to admit the consideration of velocity at any location as an average velocity of travel on the network in the immediate area surrounding that location. This interpretation of urban transportation ignores variations in travel speeds in different directions, and stresses that velocity is mainly a function of position rather than of direction, and is thus a *scalar* measure. This view is particularly meaningful when velocity is taken as an average for large areas. Areas where travel is easy and efficient allow higher velocities, while areas with prevailing congestion or smaller traffic capacities only allow low travel speeds.

If this is a satisfactory characterisation of the transport network in cities then we can view urban travel as taking place in a *continuous* velocity field; that is a field in which the velocity does not vary appreciably between nearby points. This view of transportation recreates the possibility of a geometric characterisation of urban travel.

When velocities form a continuous scalar field, it is possible to transform the urban plane into a time surface (as described in Section 2). The time surface has the property that travel time between two points on the plane is identical with the distance between the images of these points on the time surface[1].

This conception allows us to construct minimum paths and isochrones for different velocity fields. It also allows for the calculation of travel times between points, and consequently for calculations of measures of accessibility and market areas.

In this paper we restrict the analysis and the examples to *radially symmetric* velocity fields, where $V = V(r)$ only, r being distance from the city centre. With further refinement the analysis could be extended to non-symmetric velocity fields $V = V(r, \theta)$, and could also include fields in which the velocity varies with direction of travel. The present analysis implicitly restricts itself to surface travel. Incorporation of several transport modes still awaits further development.

We examine in detail four examples in which the velocity field is continuous, scalar, and radially symmetric. While three of the examples are hypothetical, the fourth has been empirically derived for the Greater Manchester urban area. For each example of a velocity field discussed below we later construct a time surface and families of minimum paths and isochrones, following the theoretical discussion in each section.

Example 1.1

We first examine the traditional assumption that travel proceeds with equal ease in all directions, and that time is always proportional to distance[2]. This form of travel takes place on a velocity field

$$V = V_0 \tag{1}$$

where V is the velocity and V_0 is a constant.

Example 1.2

We assume that the central velocity is 0, and that velocity then increases proportionally to the distance r from the centre. This is a first approximation to the velocity field created by the phenomena of congestion in central areas and improvement of travel facilities in the periphery. The velocity field takes the form of a cone

$$V = \omega r \tag{2}$$

where r measures distance from the city centre and ω is a constant.

Example 1.3

We assume that the central velocity is finite, but that velocities increase as the square of the distance from the centre. The velocity field then takes the form of a paraboloid

$$V = ar^2 + b \tag{3}$$

where a and b are constants.

Example 1.4

The fourth example was derived from an empirical measurement of velocity variations in the Greater Manchester urban area.

We examined a 10% sample of velocities on the existing network utilised by the SELNEC Transportation Study[3]. The velocity at various radii was averaged from a

(1) This idea is suggested by Warntz (1967, pp.7-8).
(2) This assumption is used by Lösch (1967, for instance p.97), by Alonso (1965, p.18), and others.
(3) Data were obtained from SELNEC (South East Lancashire/North East Cheshire) Transportation Study. In the measurement of distances from the centre, we used a map of the road network used by SELNEC. Speeds were computed from SELNEC 1965 HO(UPD4) Control Cost network.

sample draw
against dista

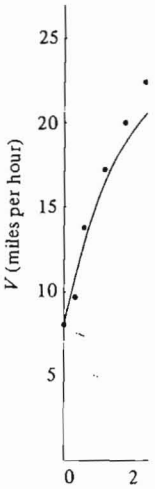

Figure 1. Aver
$V = 24{\cdot}9 - 16\cdot$

A satisfact
the appropria

$V = a - b$e

to obtain

$V = 24{\cdot}9\cdot$

where r is me

Significant
centre, are du
Urmston–Sal
seem to rise
the centre in

2 Time surfa

We assume a
the plane. W
travel time o
shown later t
time surface.

The above

$$\Delta t = \frac{\Delta s}{V}$$

where Δt is a
distance on t

An elemen

$\Delta s = (\Delta r^2 -$

sample drawn randomly with respect to direction. These averages were then graphed against distance from the centre. This is illustrated in Figure 1.

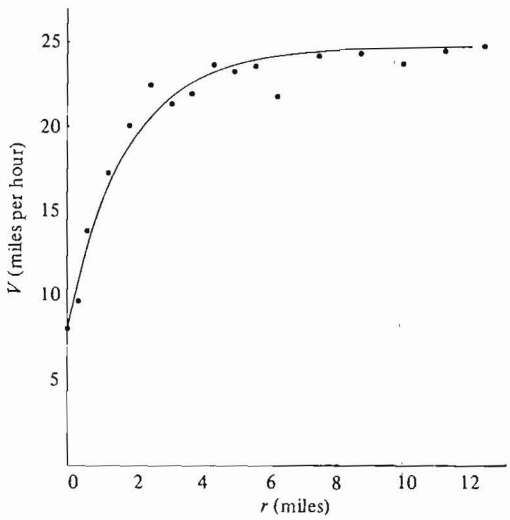

Figure 1. Average velocity as a function of distance from central Manchester, 1965: $V = 24{\cdot}9 - 16{\cdot}9e^{-0{\cdot}56r}$.

A satisfactory continuous approximation for these points was obtained by choosing the appropriate parameters for the velocity field

$$V = a - be^{-cr} \tag{4}$$

to obtain

$$V = 24{\cdot}9 - 16{\cdot}9e^{-0{\cdot}56r} \tag{5}$$

where r is measured in miles and V in miles per hour.

Significant deviations from the curve, particularly those at 3 and 6 miles from the centre, are due to congestion in the two rings of dense settlement outside Manchester: Urmston–Sale–Stockport and Bolton–Bury–Rochdale–Oldham. Average velocities seem to rise sharply away from the centre and then to even out as the distance from the centre increases beyond 8 miles.

2 Time surfaces for scalar velocity fields

We assume a continuous, scalar, and radially symmetric velocity field $V = V(r)$ over the plane. We now wish to construct a time surface which has the property that travel time on the plane corresponds to distance on the time surface. It will be shown later that minimum time paths on the plane correspond to geodesics on the time surface.

The above requirement may be expressed in the form

$$\Delta t = \frac{\Delta s}{V} \tag{6}$$

where Δt is an element of distance on the time surface, and Δs is an element of distance on the plane.

An element of distance on the plane is, in polar coordinates (r, θ),

$$\Delta s = (\Delta r^2 + r^2 \Delta\theta^2)^{1/2}\ , \tag{7}$$

and an element of distance on the time surface is, in cylindrical coordinates (ρ, z, ϕ),

$$\Delta t = (\Delta\rho^2 + \Delta z^2 + \rho^2 \Delta\phi^2)^{1/2} . \tag{8}$$

These coordinate systems are illustrated in Figure 2.

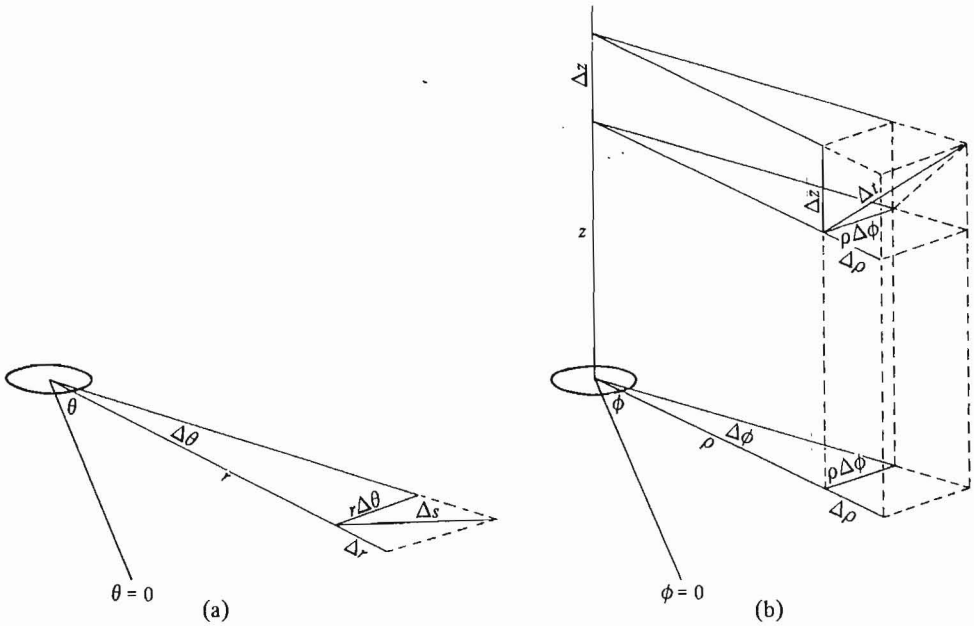

Figure 2. The coordinate system (r, θ) of the urban plane (a), and the coordinate system (ρ, z, ϕ) of the time surface (b).

We define

$$\theta = \phi . \tag{9}$$

We have, from Equations (6), (7), and (8),

$$\Delta\rho^2 + \Delta z^2 + \rho^2 \Delta\phi^2 = \frac{\Delta r^2}{V^2} + \frac{r^2 \Delta\theta^2}{V^2} . \tag{10}$$

For movement in which θ is fixed, $\Delta\theta = \Delta\phi = 0$, and we obtain

$$\Delta\rho^2 + \Delta z^2 = \frac{\Delta r^2}{V^2} . \tag{11}$$

For movement in which r is fixed, $\Delta r = 0$, and

$$\rho^2 \Delta\phi^2 = \frac{r^2}{V^2} \Delta\theta^2 \tag{12}$$

so, by Equation (9),

$$\rho = \frac{r}{V} . \tag{13}$$

If we divide Equation (11) by Δr^2 and take its limit as $\Delta r \to 0$, we obtain

$$\left(\frac{d\rho}{dr}\right)^2 + \left(\frac{dz}{dr}\right)^2 = \frac{1}{V^2} . \tag{14}$$

From Equations (13) and (14) we obtain

$$\frac{dz}{dr} = \frac{1}{V^2}\left[2rV\left(\frac{dV}{dr}\right) - r^2\left(\frac{dV}{dr}\right)^2\right]^{1/2} . \tag{15}$$

Integrating Equation (15) yields a constant of integration. For any given constant of integration we obtain from Equations (9), (13), and (15) a transformation:

$$T_V: \quad (r, \theta) \to (\rho, z, \phi) . \tag{16}$$

As r and θ vary over the urban plane the transformation T_V defines a parametric representation of a surface, the *travel time surface*. This transformation maps travel times between nearby points on the plane to distances on the time surface, as can be verified from Equation (10).

The transformation T_V is conformal, that is it preserves angles between curves, wherever the time surface is locally euclidean. A small triangle on the plane, with edges Δs_1, Δs_2, and Δs_3, is mapped by the transformation T_V into a small triangle on the time surface with edges Δt_1, Δt_2, and Δt_3.

By Equation (6) we have

$$\frac{\Delta t_1}{\Delta s_1} = \frac{\Delta t_2}{\Delta s_2} = \frac{\Delta t_3}{\Delta s_3} = \frac{1}{V} . \tag{17}$$

The two triangles are similar and hence the corresponding angles are equal.

A real time surface exists only as long as the discriminant of Equation (15) is non-negative, and $V \neq 0$ for $0 < r < \infty$. This is identical with the requirement that

$$0 \leqslant \frac{dV}{dr} \leqslant \frac{2V}{r} \quad \text{for } 0 < r < \infty . \tag{18}$$

When strict inequalities are satisfied dz/dr has a fixed sign, z is a monotonic function of r, and hence the transformation T_V is one-to-one.

We now derive time surfaces for the velocity fields presented as examples in Section 1. Since these examples involve radially symmetric velocity fields their time surfaces also must possess radial symmetry. We can therefore characterise these surfaces by a cross-sectional curve in any (ρ, z) plane.

Example 2.1

$V(r) = V_0$, where V_0 is a constant.

Here $dV/dr = 0$, so from Equation (15) we obtain

$$z = z_0 \tag{19}$$

where z_0 is a constant. Thus the time surface is a plane and the transformation becomes the scale transformation:

$$\rho = \frac{r}{V_0} . \tag{20}$$

Example 2.2

$V(r) = \omega r$, where ω is a constant.

From Equation (13) we obtain

$$\rho = \frac{1}{\omega} . \tag{21}$$

Equation (15) takes the form

$$\frac{dz}{dr} = \frac{1}{\omega^2 r^2}(2r^2\omega^2 - r^2\omega^2)^{1/2} = \frac{1}{\omega r} , \tag{22}$$

and so we obtain

$$z = \frac{1}{\omega} \ln \frac{r}{r_0} , \tag{23}$$

where r_0 is the radius corresponding to $z = 0$. The time surface is a cylinder of radius $1/\omega$ which extends over the complete z axis, $z = -\infty$ corresponding to $r = 0$, and $z = +\infty$ to $r = \infty$. For this surface any journey passing through the origin takes an infinite time.

Example 2.3
$V(r) = ar^2 + b$, where a and b are constants.
We show that the time surface is a sphere of radius $1/\omega$ where

$$\omega^2 = 4ab . \tag{24}$$

From Equation (13) we have

$$\frac{d\rho}{dr} = \left(1 - \rho \frac{dV}{dr}\right) \frac{1}{V} . \tag{25}$$

When $V = ar^2 + b$ and $\omega^2 = 4ab$, we obtain

$$V^2 \left(\frac{d\rho}{dr}\right)^2 = (1 - 2ar\rho)^2 = 1 - \rho^2 \omega^2 . \tag{26}$$

Using Equation (14) we can write

$$\left(\frac{d\rho}{dr}\right)^2 + \left(\frac{dz}{dr}\right)^2 = \left(\frac{d\rho}{dr}\right)^2 \frac{1}{1 - \rho^2 \omega^2} . \tag{27}$$

Simplifying this equation we can obtain a differential equation in z and ρ

$$\frac{dz}{d\rho} = \rho \left(\frac{1}{\omega^2} - \rho^2\right)^{-1/2} . \tag{28}$$

The solution of this differential equation is

$$(z - c)^2 + \rho^2 = \frac{1}{\omega^2} , \tag{29}$$

which is the equation of a sphere of radius $1/\omega$, where c is an arbitrary constant. If we select $c = 1/\omega$ the sphere passes through $\rho = 0$, $z = 0$. This sphere then satisfies

$$\left(z - \frac{1}{\omega}\right)^2 + \rho^2 = \frac{1}{\omega^2} . \tag{30}$$

Applying Equation (13) we obtain

$$\rho = \frac{r}{ar^2 + b} . \tag{31}$$

Solving Equation (30) for z, and substituting the above result for ρ, we obtain

$$z = \frac{2ar^2}{\omega(ar^2 + b)} . \tag{32}$$

Example 2.4
$V(r) = a - be^{-cr}$, where a, b, and c are constants.

In this example we illustrate the derivation of a time surface for which an algebraic equation is difficult to obtain. From Equation (13) we can obtain ρ as a function

of r:

$$\rho = \frac{r}{a - be^{-}}$$

From Equatic
compute $z =$
approaches th
values of z ob
plane at the s
value for ρ an
time surface.

The cross-se
field thus take

At large dis
Example 2.1.
become lower

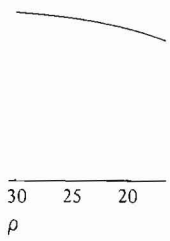

Figure 3. The ti

3 Minimum p
To avoid ambi
two points on
minimum path
geodesic. A s
from a fixed p
distance from
paths map, in a
set of identitie

$$\int_A^B \frac{ds}{V} = \int_A$$

The set of isoc
set of minimu
family to the s
Since the trans
on to isometri

In most case
surface and the
case, however,

of r:

$$\rho = \frac{r}{a - be^{-cr}} \ . \tag{33}$$

From Equation (15) we obtain dz/dr as a function of r. Given a, b, and c we can compute $z = z(r)$ by measuring the areas under the curve dz/dr. Since this curve approaches the r axis more rapidly than any power of r, as r approaches infinity, the values of z obtained are bounded above. The time surface thus possesses an asymptotic plane at the supremum of the z values. For each r the above procedure produces a value for ρ and a corresponding value for z, giving us the cross-sectional curve of the time surface.

The cross-sectional curve of the time surface for the Greater Manchester velocity field thus takes the form illustrated in Figure 3.

At large distances from the centre the time surface approaches that of the plane of Example 2.1. As we approach the congested areas of central Manchester, road speeds become lower and the time surface is progressively distorted.

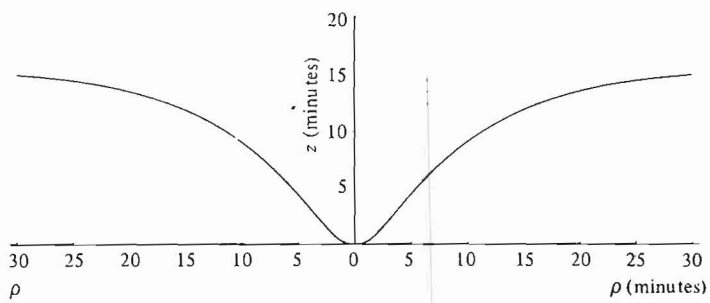

Figure 3. The time surface for Greater Manchester, 1965.

3 Minimum paths and isochrones

To avoid ambiguity, we first define the terms used in this section. The path between two points on the plane which can be travelled in the smallest time is said to be the *minimum path*. The shortest path between two points on the time surface is the *geodesic*. A set of points on the plane which can just be reached in a given time from a fixed point is an *isochrone*. A set of points on the time surface at a given distance from a fixed point is an *isometric*. Under the transformation T_V, minimum paths map, in a one-to-one manner, on to geodesics, as can be seen from the following set of identities:

$$\int_A^B \frac{ds}{V} = \int_A^B \frac{1}{V}\left[r^2 + \left(\frac{dr}{d\theta}\right)^2\right]^{1/2} d\theta = \int_{T_V(A)}^{T_V(B)} \left[\rho^2 + \left(\frac{d\rho}{d\phi}\right)^2 + \left(\frac{dz}{d\phi}\right)^2\right]^{1/2} d\phi = \int_{T_V(A)}^{T_V(B)} dt \ . \tag{34}$$

The set of isochrones of a given point on the plane is the orthogonal family to the set of minimum paths through the point. Similarly the isometrics are the orthogonal family to the set of geodesics through the corresponding point on the time surface. Since the transformation T_V is conformal the isochrones map in a one-to-one manner on to isometrics.

In most cases where $V = V(r)$ is given it is easier to find the geodesic on the time surface and then to obtain the equation for the travel path on the plane. In the general case, however, it appears simpler to solve the variational problem of minimising the

integral (34), written in the form

$$\int_A^B F\left(r, \frac{\mathrm{d}r}{\mathrm{d}\theta}\right) \mathrm{d}\theta \ , \tag{35}$$

where

$$F\left(r, \frac{\mathrm{d}r}{\mathrm{d}\theta}\right) = \frac{1}{V}\left[r^2 + \left(\frac{\mathrm{d}r}{\mathrm{d}\theta}\right)^2\right]^{1/2} \ . \tag{36}$$

The solution to this variational problem must satisfy Euler's differential equation[4]

$$\frac{\mathrm{d}}{\mathrm{d}\theta}\left(\frac{\partial F}{\partial r'}\right) = \frac{\partial F}{\partial r} \ , \tag{37}$$

where $r' = \mathrm{d}r/\mathrm{d}\theta$. Since F does not involve θ, we observe that

$$\frac{\mathrm{d}}{\mathrm{d}\theta}\left(F - r'\frac{\partial F}{\partial r'}\right) = r'\frac{\partial F}{\partial r} + r''\frac{\partial F}{\partial r'} - r''\frac{\partial F}{\partial r'} - r'\left[\frac{\mathrm{d}}{\mathrm{d}\theta}\left(\frac{\partial F}{\partial r'}\right)\right] = r'\left[\frac{\partial F}{\partial r} - \frac{\mathrm{d}}{\mathrm{d}\theta}\left(\frac{\partial F}{\partial r'}\right)\right] \ . \tag{38}$$

The above expression vanishes by Equation (37), so we can simplify Euler's equation (Courant and Hilbert, 1953, p.206) to the form

$$F - r'\frac{\partial F}{\partial r'} = K \ , \tag{39}$$

where K is a constant of integration.

If we substitute from Equation (36) for F, and rewrite r' as $\mathrm{d}r/\mathrm{d}\theta$, we obtain the differential equation of the minimum paths

$$\frac{\mathrm{d}r}{\mathrm{d}\theta} = \frac{r}{KV}(r^2 - K^2V^2)^{1/2} \ . \tag{40}$$

This differential equation, when solved for a given V, yields a second constant of integration. Both constants can be evaluated by requiring that the minimum path passes through the points A and B. If we allow the point B to vary we can write the family of minimum paths through A, (r_0, θ_0), in the form

$$g(r_0, \theta_0, r, \theta, K) = 0 \tag{41}$$

where (r_0, θ_0) are the coordinates of the given point and K is the parameter characterising the family of minimum paths.

To obtain the family of isochrones of a given point we must find the orthogonal family to the family of Equation (41). We first find the differential equation that Equation (41) satisfies, eliminating the parameter K in the process (see Example 3.2 below)[5],

$$h\left(r_0, \theta_0, r, \theta, r\frac{\mathrm{d}\theta}{\mathrm{d}r}\right) = 0 \ . \tag{42}$$

We then replace $r\dfrac{\mathrm{d}\theta}{\mathrm{d}r}$ in Equation (42) by $-\dfrac{1}{r}\dfrac{\mathrm{d}r}{\mathrm{d}\theta}$ to obtain

$$h\left(r_0, \theta_0, r, \theta, -\frac{1}{r}\frac{\mathrm{d}r}{\mathrm{d}\theta}\right) = 0 \ . \tag{43}$$

Equation (43) is the differential equation of the family of isochrones of a given point.

[4] The conditions for the existence of the minimum are discussed and presented in Courant and Hilbert (1953, p.184).
[5] This procedure is discussed in Protter and Morrey (1964, p.659).

We now de
earlier. First
for all radially
Equation (34)

$$\int_0^{r_1} \frac{1}{V}\left[1 +\right.$$

for a path $r =$
the centre to

$$\frac{\mathrm{d}\theta}{\mathrm{d}r} = 0 \ .$$

The time alor

$$\int_0^{r_1} \frac{\mathrm{d}r}{V}$$

and, since

$$\left[1 + r^2\left(\frac{\mathrm{d}\theta}{\mathrm{d}r}\right.\right.$$

the value of th
in Equation (
orthogonal fa
The figures
isochrones fo

Example 3.1
$V(r) = V_0$, wl
From Exam
and the isome
minimum patl
illustrated in

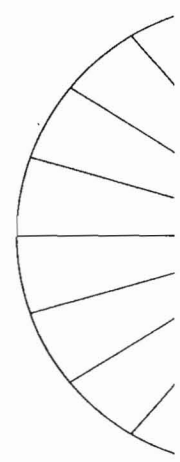

Figure 4. Minin

We now derive minimum paths and isochrones for each of the examples mentioned earlier. First observe that the minimum paths from the city centre are straight lines for all radially symmetric velocity fields. In this case we can write the integral of Equation (34) in the form

$$\int_0^{r_1} \frac{1}{V}\left[1 + r^2\left(\frac{\mathrm{d}\theta}{\mathrm{d}r}\right)^2\right]^{1/2} \mathrm{d}r \tag{44}$$

for a path $r = r(\theta)$ between the centre and a point (r_1, θ_1). For a radial path from the centre to (r_1, θ_1) we have

$$\frac{\mathrm{d}\theta}{\mathrm{d}r} = 0 \ . \tag{45}$$

The time along that path is

$$\int_0^{r_1} \frac{\mathrm{d}r}{V} \tag{46}$$

and, since

$$\left[1 + r^2\left(\frac{\mathrm{d}\theta}{\mathrm{d}r}\right)^2\right]^{1/2} \geqslant 1 \ , \tag{47}$$

the value of the integral in Equation (44) must always exceed the value of the integral in Equation (46). Hence the minimum paths from the centre are radial paths. The orthogonal family to the family of radial paths is the family of concentric circles.

The figures shown below illustrate the family of minimum paths and the family of isochrones for a location east of the city centre.

Example 3.1
$V(r) = V_0$, where V_0 is a constant.

From Example 2.1 the time surface is a plane so the geodesics are straight lines and the isometrics are circles. The transformation is a scale transformation, so the minimum paths are straight lines and the isochrones are circles. This example is illustrated in Figure 4.

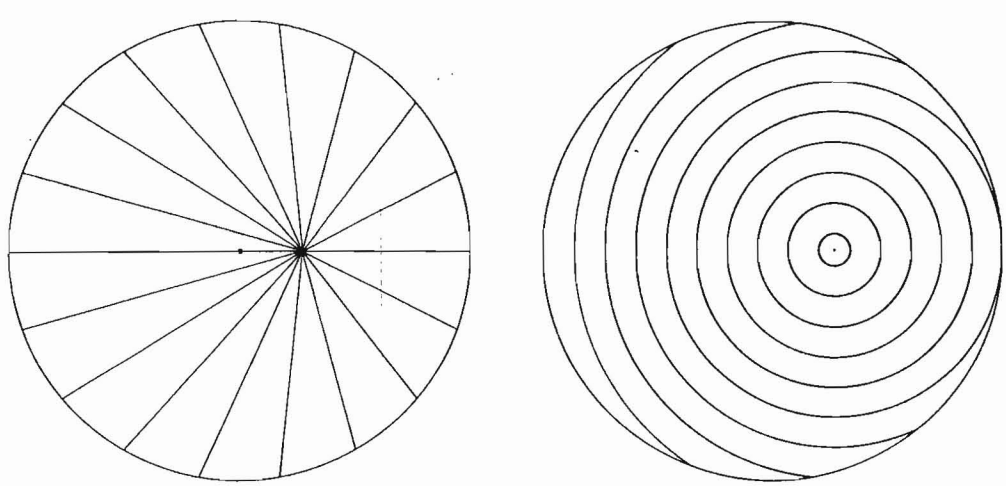

(a) (b)

Figure 4. Minimum paths (a) and isochrones (b) for the velocity field $V = V_0$.

Example 3.2
$V(r) = \omega r$, where ω is a constant.

In this example we follow the procedure described at the beginning of this section. To find the minimum paths we substitute $V = \omega r$ in Equation (40) to obtain

$$\frac{dr}{d\theta} = mr, \tag{48}$$

where

$$m = \frac{(1-K^2\omega^2)^{1/2}}{K\omega}.$$

If we impose the initial condition that the minimum paths pass through $\theta = 0$ at $r = r_0$, then the solutions to Equation (48) can be written as

$$r = r_0 e^{m\theta}. \tag{49}$$

This is the equation of a spiral which cuts each radius at a constant angle. For $m = 0$ we obtain a minimum path which is the circle $r = r_0$.

To find the isochrones of $(r_0, 0)$ we write Equation (49) in the form

$$m = \frac{\ln r - \ln r_0}{\theta}, \tag{50}$$

and differentiate both sides with respect to r, yielding

$$\theta = r\frac{d\theta}{dr}\ln\frac{r}{r_0}. \tag{51}$$

We replace the term $r\dfrac{d\theta}{dr}$ by $-\dfrac{1}{r}\dfrac{dr}{d\theta}$ to obtain

$$\theta = -\frac{1}{r}\frac{dr}{d\theta}\ln\frac{r}{r_0}, \tag{52}$$

which integrates to give

$$C-\theta^2 = \left(\ln\frac{r}{r_0}\right)^2, \tag{53}$$

where C is a constant of integration. Each value of C specifies one isochrone from the family. If we consider movement along the minimum path $r = r_0$, each isochrone in the above family is met when $\theta^2 = C$, and at a time $t = r_0 C^{1/2}/\omega r_0$. So the parameter C can be replaced by $\omega^2 t^2$ and the family of isochrones written

$$r_0 e^{(\omega^2 t^2 - \theta^2)^{1/2}}. \tag{54}$$

We can now express the travel time between the point $(r_0, 0)$ and any other point (r, θ) by solving the above equation for t:

$$t = \frac{1}{\omega}\left(\theta^2 + \ln\frac{r}{r_0}\right)^{1/2}. \tag{55}$$

We can recover the geodesics by using the transformation of Equation (23) in Equation (49) to obtain

$$z = \frac{m\theta}{\omega}, \tag{56}$$

which is a helix.

One can intuitively see that geodesics are helixes by opening the cylinder along a generator to form a plane, where the above equation represents a straight line. The

isometrics hav

$$z^2 + \left(\frac{\theta}{\omega}\right)^2 =$$

which are clos
curves for $t >$

The family
of the city ce
equal time int

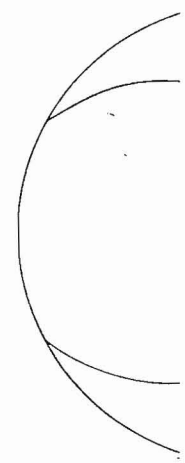

Figure 5. Minim

Example 3.3
$V = ar^2 + b$, w

In this exan
simplified by
stereographic
the central vel

$$\left(bz - \frac{b}{\omega}\right)^2 +$$

This is the equ
plane at the ci
line which joi
projection of

To verify th

$$\frac{r}{b\rho} = \frac{2b}{\omega}\Big/\Big($$

From Equat

$$\frac{2}{\omega} - z = \frac{}{\omega(}$$

so that both si

isometrics have the equation

$$z^2 + \left(\frac{\theta}{\omega}\right)^2 = t^2 , \tag{57}$$

which are closed curves if $t < \pi/\omega$, a self-intersecting curve at $t = \pi/\omega$, and a pair of curves for $t > \pi/\omega$.

The family of spiral minimum paths, and the family of isochrones for a point east of the city centre are illustrated in Figure 5. The isochrones have been drawn at equal time intervals, except the last one which is the isochrone reached at $t = \pi/\omega$.

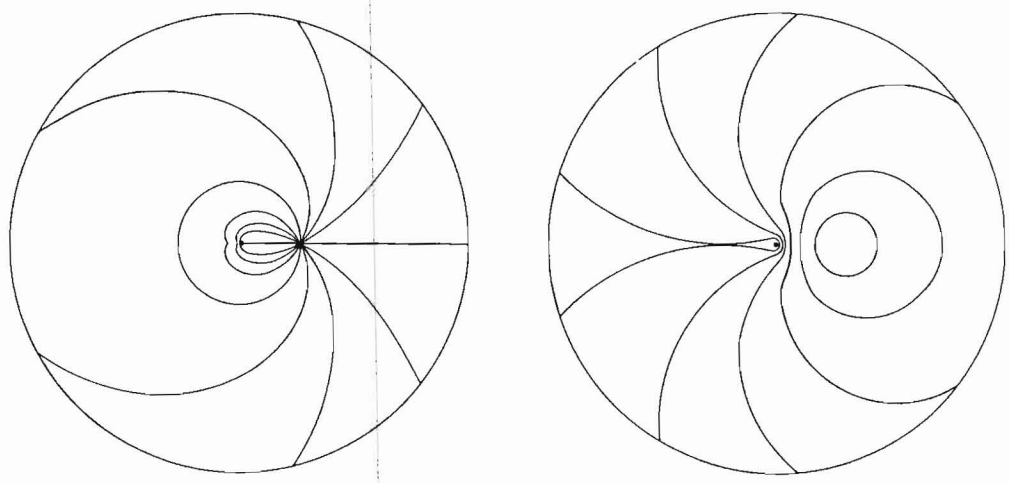

(a) (b)

Figure 5. Minimum paths (a) and isochrones (b) for the velocity field $V = \omega r$.

Example 3.3

$V = ar^2 + b$, where a and b are constants.

In this example the construction of minimum paths and isochrones is greatly simplified by the observation that we can represent the transformation T_V as a stereographic projection. If we multiply the variables (ρ, z) of the time-sphere by the central velocity b, we obtain from Equation (30)

$$\left(bz - \frac{b}{\omega}\right)^2 + (b\rho)^2 = \left(\frac{b}{\omega}\right)^2 . \tag{58}$$

This is the equation of a sphere in urban space of radius b/ω, tangent to the urban plane at the city centre. The transformation moves corresponding points along the line which joins them to the north pole. Figure 6 illustrates the stereographic projection of the sphere in urban space.

To verify that T_V is a stereographic projection we must show that

$$\frac{r}{b\rho} = \frac{2b}{\omega} \Big/ \left(\frac{2b}{\omega} - bz\right) . \tag{59}$$

From Equation (32) we have

$$\frac{2}{\omega} - z = \frac{2b}{\omega(ar^2 + b)} = \frac{2b}{\omega V} , \tag{60}$$

so that both sides of Equation (59) equal V/b.

The geodesics on the spherical time surface are great circles. The family of great circles through a given point also passes through its antipodal point. Under a stereographic projection circles are transformed into circles[6]. So the minimum paths through a point on the plane are circles which also pass through another fixed point. This is a coaxial system of circles, one member of which is the straight line joining the two points and passing through the city centre. This line is the stereographic image of the great circle passing through the two antipodal points on the sphere and the south pole.

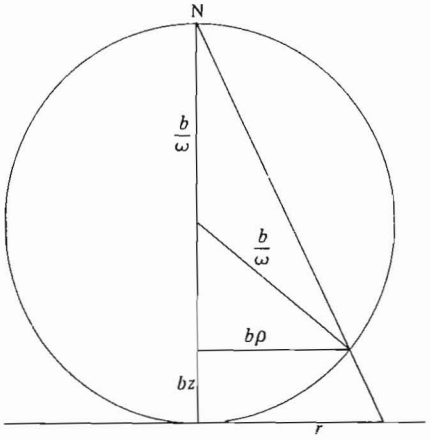

Figure 6. Stereographic projection of the sphere in urban space.

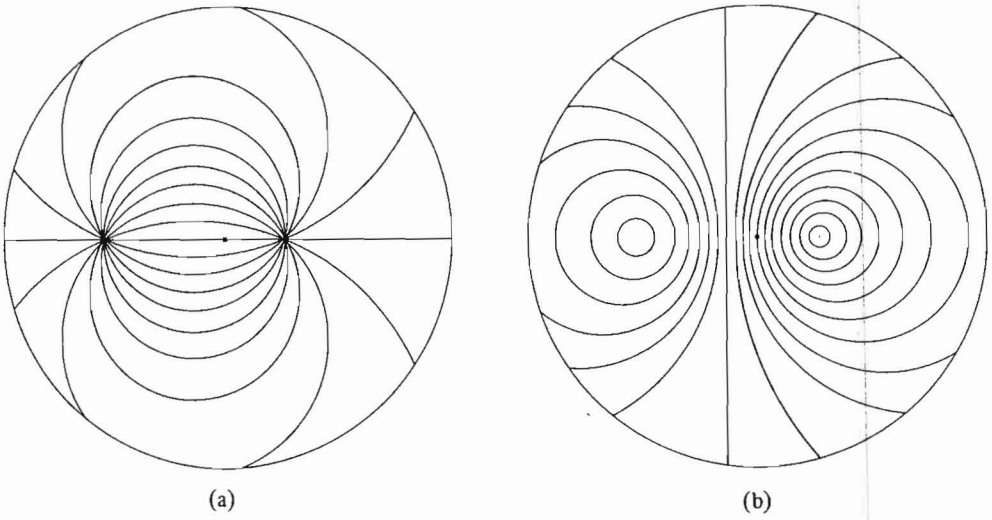

Figure 7. Minimum paths (a) and isochrones (b) for the velocity field $V = ar^2 + b$.

On the time-sphere the family of isometrics of a given point is a set of circles whose centres lie on the line connecting the point and its antipode. Again, under a stereographic projection this family of circles maps into a family of circles on the plane. Since the isochrones are the orthogonal trajectories of the minimum paths,

[6] The proof of this result appears in Hilbert and Cohn-Vossen (1952, p.250).

this family is the
circles passing thr
It is easy to se
from the two poi
the perpendicular
stereographic ima
the north pole.
Figure 7 shows
isochrones for ou

Example 3.4
$V(r) = 24 \cdot 9 - 16$
In this example
minimum paths a
each point on an
an interval Δt we
the urban plane.
each point of this
arcs. The envelop
of this method th
paths can now be
one isochrone to t
is improved if the
original point. T

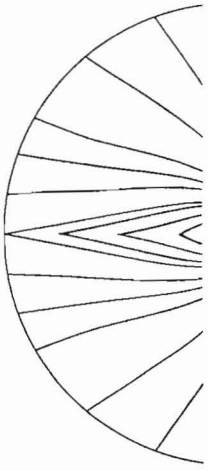

Figure 8. Minimum
1965.

4 Conclusion

The concept of u
urban spatial stru
space allows us to
areas. Through t

[7] This constructior
Huygens, 1912).

this family is the unique family of circles which is orthogonal to the family of coaxial circles passing through the two fixed points.

It is easy to see that this family is the family of coaxial circles whose distances from the two points have a fixed ratio. The family includes a straight line which is the perpendicular bisector of the line joining these two points. This line is the stereographic image of the isometric small circle on the sphere which passes through the north pole.

Figure 7 shows the coaxial families of circles which form the minimum paths and isochrones for our given point, east of the city centre.

Example 3.4
$V(r) = 24{\cdot}9 - 16{\cdot}8e^{-0{\cdot}56r}$.

In this example we make no use of the time surface for the construction of minimum paths and isochrones. Instead we use Huygens' construction[7] and treat each point on an isochrone as the origin of a new trip. To construct isochrones at an interval Δt we first draw a small circle of radius $V\Delta t$ from the original point on the urban plane. If we regard this as the first isochrone, we then set a compass on each point of this circle to have the appropriate radius $V\Delta t$ and construct a series of arcs. The envelope of these arcs defines the next isochrone. By repeated application of this method the set of isochrones of the original point is constructed. The minimum paths can now be approximated by drawing straight line segments from a point on one isochrone to the nearest point on the next isochrone. The accuracy of this method is improved if the minimum paths are drawn in the reverse direction, towards the original point. This is illustrated in Figure 8.

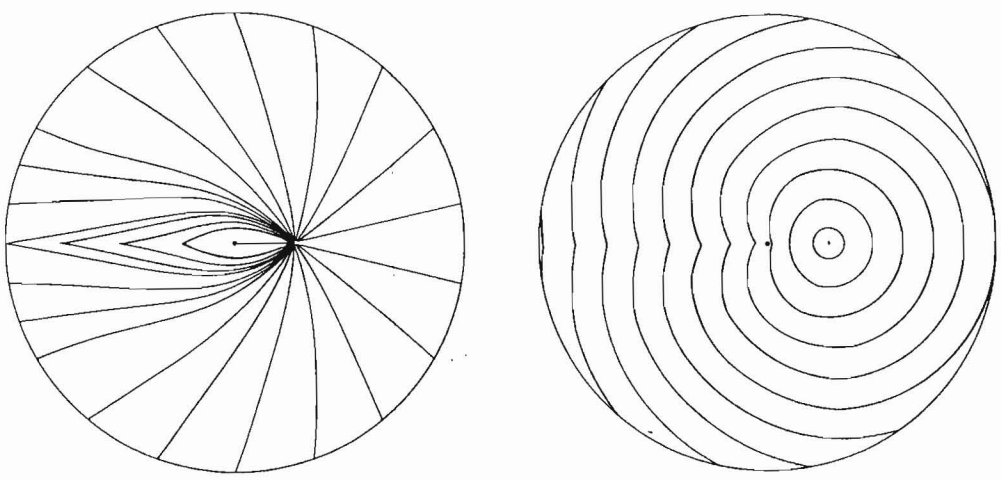

(a) (b)

Figure 8. Minimum paths (a) and isochrones (b) for a point 2·5 miles from the centre of Manchester, 1965.

4 Conclusion

The concept of urban velocity fields should be seen as a component in the analysis of urban spatial structure. Incorporation of velocity variations as distortions of urban space allows us to reintroduce geometry into the search for spatial regularities in urban areas. Through the development of modern transportation facilities, and through the

[7] This construction was described by Huygens in 1678 to determine the wavefronts of light (see Huygens, 1912).

massive growth of private automobile ownership, the velocity field of the city is constantly being deformed. It seems that these deformations move the urban velocity field away from the simple plane, creating new wrinkles in urban space, rather than flattening it out.

Present road developments usually favour peripheral improvements, and congestion levels in central areas are either remaining constant or becoming worse. Both developments are likely to increase the variations in velocities between centre and periphery, thus creating more distinct and varied velocity fields. A forthcoming paper in this journal will suggest a way of tracing the effect of particular changes in the transportation system on the urban velocity field, and consequently on accessibility, location, rent, and residential densities.

If the velocity field of a given city can be sufficiently well defined, it could prove to be a valuable indicator of the performance of the transportation system, and of the equity in the spatial distribution of transport improvements. Used in such a manner, the concept of urban velocity fields responds to the increasing need among the transportation system on the urban velocity field, and consequently on accessibility, location, rent, and residential densities.

References

Alonso, W., 1965, *Location and Land Use* (Harvard University Press, Cambridge, Mass., USA).
Courant, R., Hilbert, D., 1953, *Methods of Mathematical Physics,* **1** (Interscience, John Wiley, New York, USA).
Hilbert, D., Cohn-Vossen, H., 1952, *Geometry and the Imagination* (Chelsea Publishing Company, New York, USA).
Huygens, C., 1912, *Treatise on Light,* Translator S.P.Thompson (Macmillan, London, England).
Lösch, A., 1967, *The Economics of Location,* Translator W.H.Woglom (Interscience, John Wiley, New York, USA).
Protter, M.H., Morrey, C.D. Jr., 1964, *Modern Mathematical Analysis* (Addison-Wesley, Reading, Mass., USA).
Warntz, W., 1967, "Global science and the tyrrany of space", *Papers and Proceedings of the Regional Science Association,* **19**.

The use o
compariso

P.Haggett, K.A
Department of G
Received 11 Febr

Abstract. The ge
Proposed solutior
the indicated inst
of stable classific
rotations but mo
by successive terr
analysis. The fu
coefficients. The
patterns and by f

1 Introduction

The need to c
concern both f
historian recon
methodology i
interpretation
problem, that
tractable. At
to be extremel
underscored th
urban populati
aspect of the s
coefficients as
comparisons.
some light on
urban growth

2 Nature of th

Assume that t
of values for e
the variables a
kinds of spatia
origin (for inst
respect to this
characteristic d
In the second,
arbitrary ortho

Inter-urban
values for exan
comparisons ha
difficulty in co
'pattern similar
pattern matchi